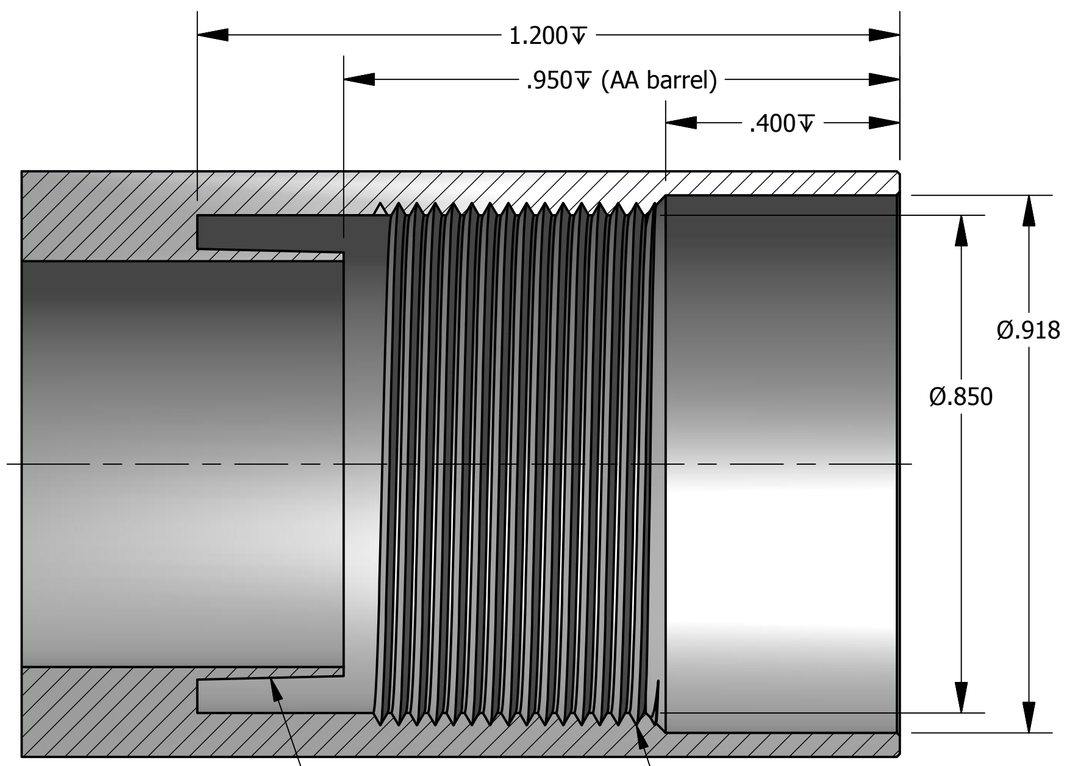

This feature is used in
SP All American barrels
to simulate the Freak insert

7/8-32 double lead 2B
Theoretical minor diameter .841-.849
Theoretical threadform major diameter (.875)
Theoretical threadform pitch diameter .855-.849

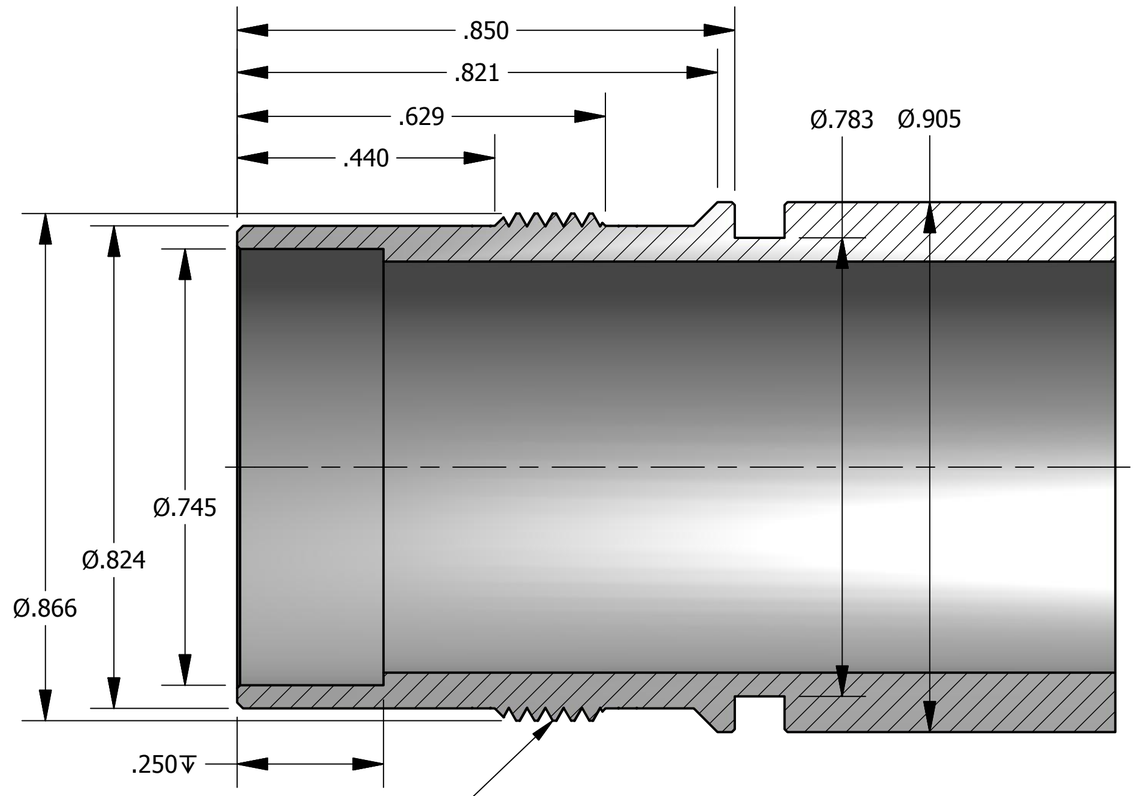

7/8-32 double lead 2A
Theoretical major diameter .868-.874
Theoretical threadform minor diameter (.837)
Theoretical threadform pitch diameter .850-.854

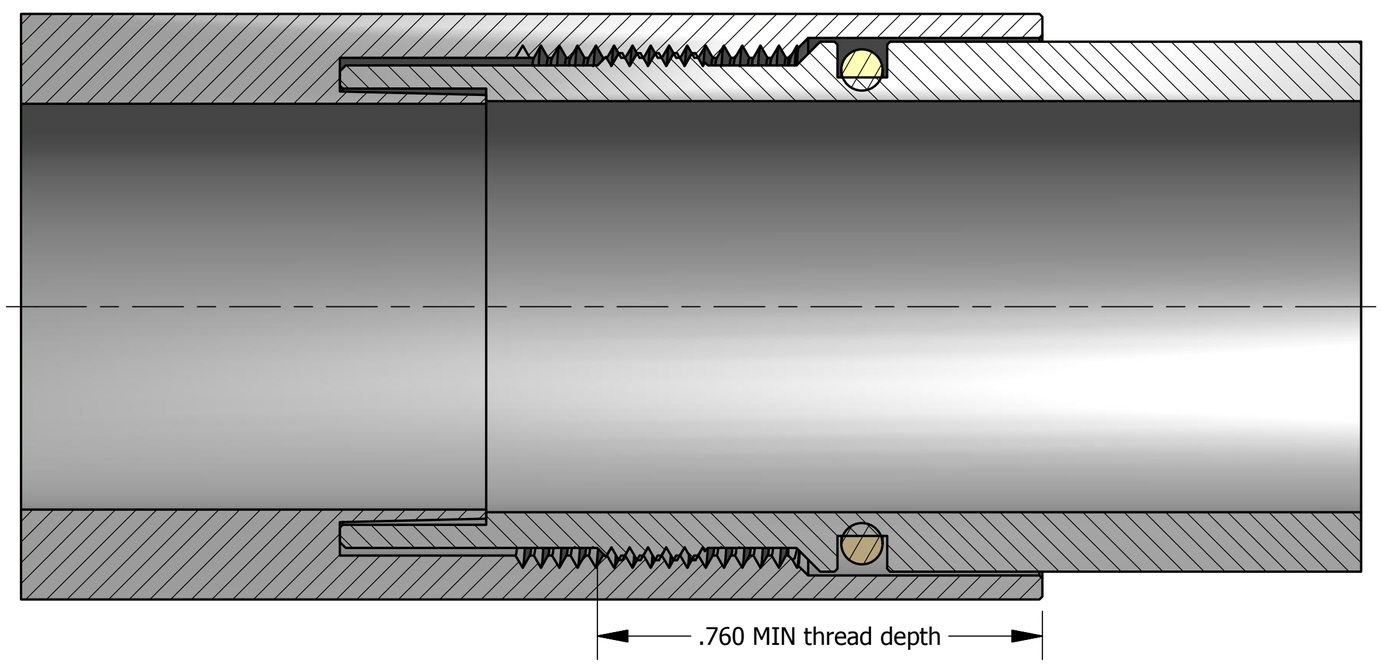

Note: Dimensions in this print are averaged measurements taken of multiple actual barrels. Theoretical specifications are included, but may be outside the dimensions provided. Many dimensions can be adjusted to ensure a proper fit.

DRAWN ALD	3/15/2014	**ZDSPB.COM**
CHECKED		TITLE
QA		Smart Parts barrel front specification
MFG		
APPROVED		SIZE C / DWG NO / REV
		SCALE / SHEET 1 OF 1